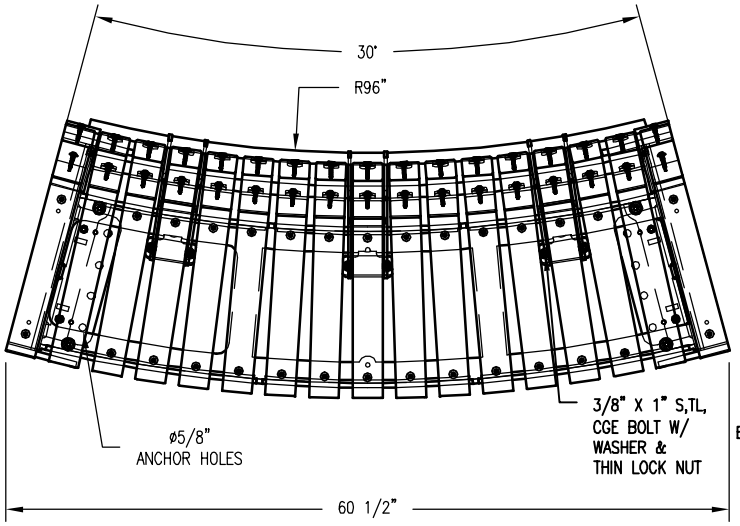

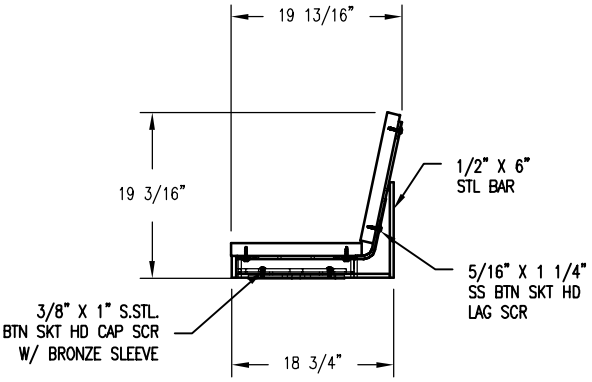

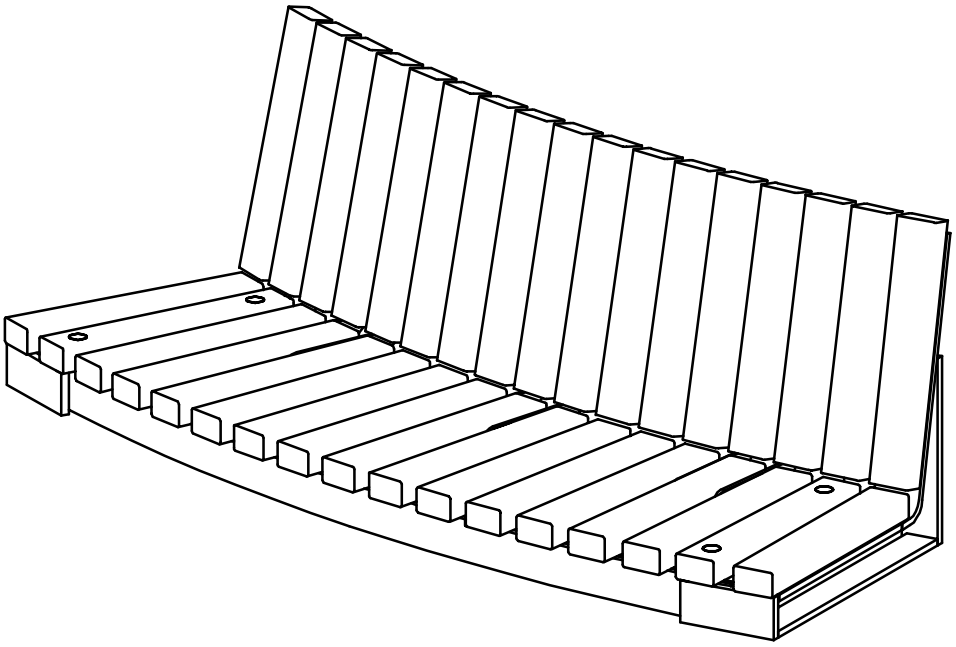

WOOD OPTIONS

- ☐ 'C' & BTR. DOUGLAS FIR KD S4S EE
- ☐ IPE S4S EE
- ☐ OTHER _____

NOTES:

1.) ALL STL. MEMBERS COATED W/ ZINC RICH EPOXY THEN FINISHED W/ POLYESTER POWDER COATING.
2.) 1/2" X 3 3/4" EXPANSION ANCHOR BOLTS PROVIDED.

DuMor, inc.	BENCH	DATE DRAWN : 2/25/22 DRAWN BY : JSB DATE REV. : 00/00/00 REV. BY : XXX	REV. A	DRAWING NUMBER WR520-96-001	SHEET 1 OF 1